THIS DRAWING IS THE PROPERTY OF ANALOG DEVICES INC. IT IS NOT TO BE REPRODUCED OR COPIED, IN WHOLE OR IN PART, OR USED IN FURNISHING INFORMATION TO OTHERS, OR FOR ANY OTHER PURPOSE DETRIMENTAL TO THE INTERESTS OF ANALOG DEVICES.
THE EQUIPMENT SHOWN HEREON MAY BE PROTECTED BY PATENTS OWNED OR CONTROLLED BY ANALOG DEVICES.

REVISIONS

REV	DESCRIPTION	DATE	APPROVED
A	INITIAL RELEASE	16NOV21	V.JEEVANNAVAR

EVAL-AD7190-ASDZ SCHEMATIC REV (A)

PAGE 2 - POWER CIRCUITRY

PAGE 3 - AD7190 CIRCUITRY

PAGE 4 - ARDUINO HEADER,PMOD & SDP CONNECTOR

P.O SPEC.	BK/BD SPEC.	SOCKET OEM	OEM PART#	HANDLER

	DATE
TEMPLATE ENGINEER –	
HARDWARE SERVICES M. VALE	16NOV21
HARDWARE SYSTEMS –	
TEST ENGINEER –	
COMPONENT ENGINEER A. GIRON	16NOV21
TEST PROCESS –	
HARDWARE RELEASE K. JABAIAN	16NOV21
DESIGNER E. DELOS REYES	16NOV21
PTD ENGINEER V. JEEVANNAVAR	16NOV21
CHECKER –	

SCHEMATIC

ANALOG DEVICES

HW TYPE : Customer Evaluation Z
Product(s): AD7190
: AD7192
PACKAGE : LeadCount-lead BodySize PackageType-family
: Pitch-pitch StyleVendor Style
<User Define>
<User Define>
<User Define>

MASTER PROJECT TEMPLATE: TBD
TESTER TEMPLATE: 064489_c

UNLESS OTHERWISE SPECIFIED DIMENSIONS ARE IN INCHES
TOLERANCES
DECIMALS X.XX +-0.010 X.XXX +-0.005
FRACTIONS +-1/32
ANGLES +-2

DRAWING NO. 02-069484-02
REV. A
SIZE D | SCALE 1:1 | CODE ID NO. CodeID | SHEET 1 OF 4

REVISIONS			
REV	DESCRIPTION	DATE	APPROVED

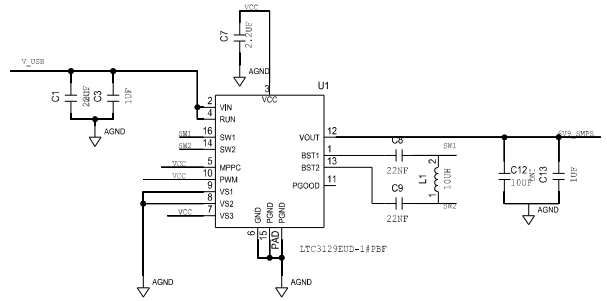

EXTERNAL VOLTAGE CONNECTOR FOR SCP BOARDS

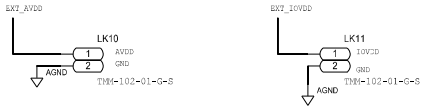

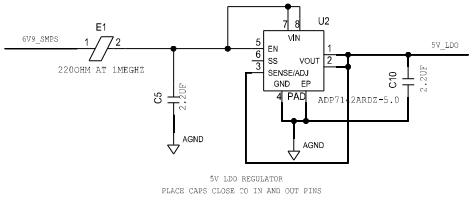

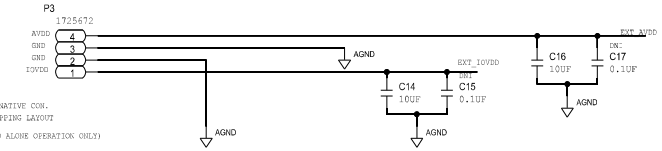

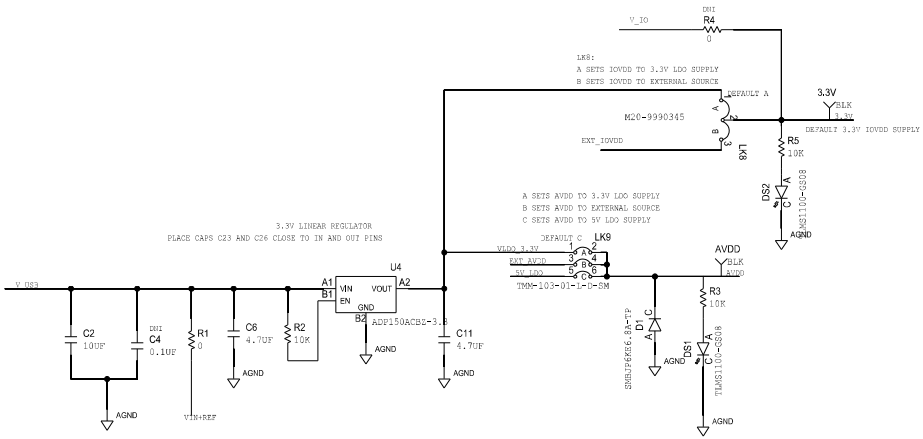

SCHEMATIC			
ANALOG DEVICES	HW TYPE : Customer Evaluation 2 Product(s): AD7190 : AD7192		
	DESIGN VIEW <DESIGN_VIEW>	DRAWING NO. 02-069484-02	REV A
	PTD ENGINEER V. JEEVANNAVAR	SIZE D / SCALE 1:1	SHEET 2 OF 4

REVISIONS			
REV	DESCRIPTION	DATE	APPROVED

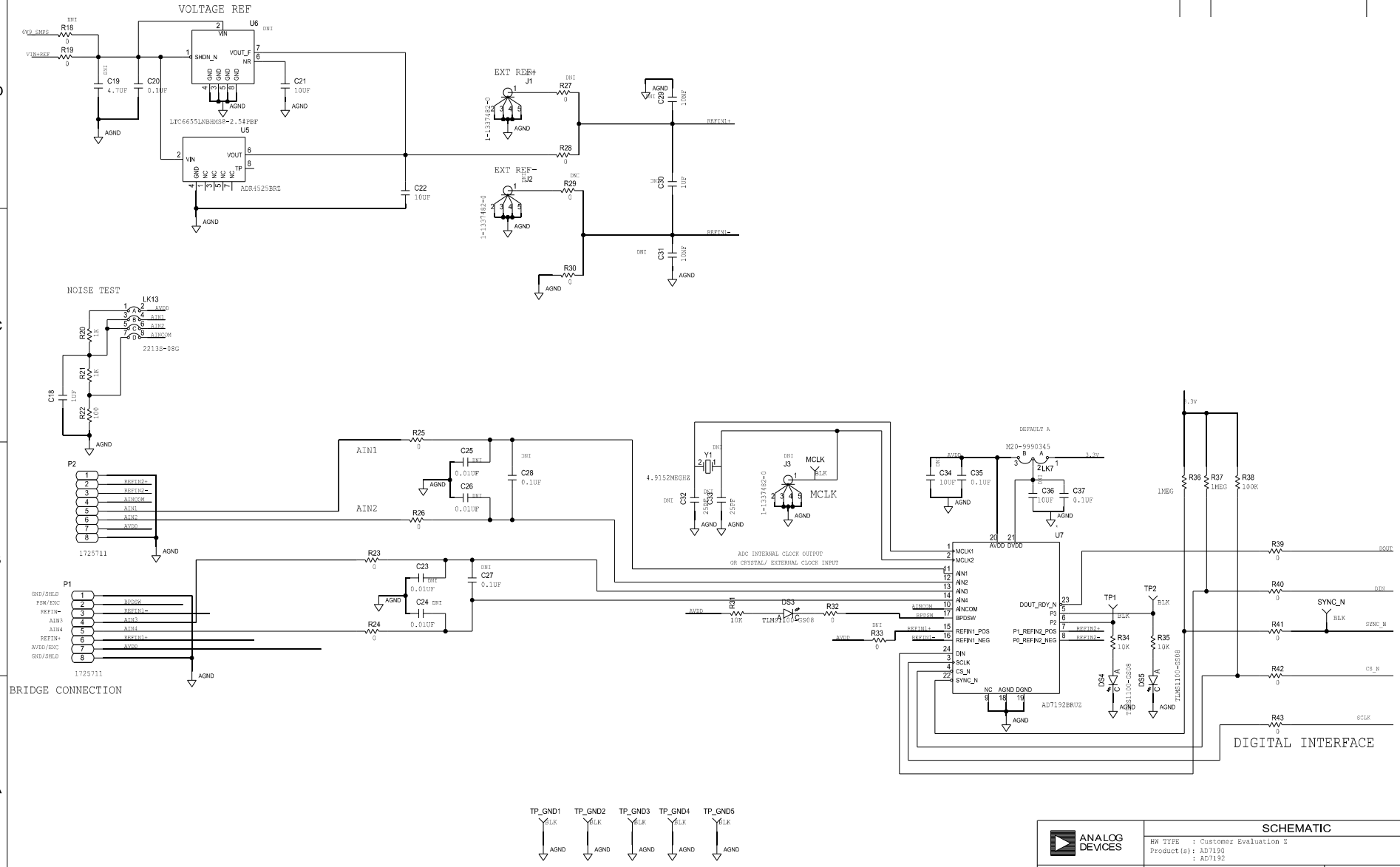

SCHEMATIC			
ANALOG DEVICES	HW TYPE : Customer Evaluation 2 Product(s): AD7190 : AD7192		
	DESIGN VIEW <DESIGN_VIEW>	DRAWING NO. 02-069484-02	REV A
	PTD ENGINEER V. JEEVANNAVAR	SIZE D / SCALE 1:1	SHEET 3 OF 4

REVISIONS			
REV	DESCRIPTION	DATE	APPROVED

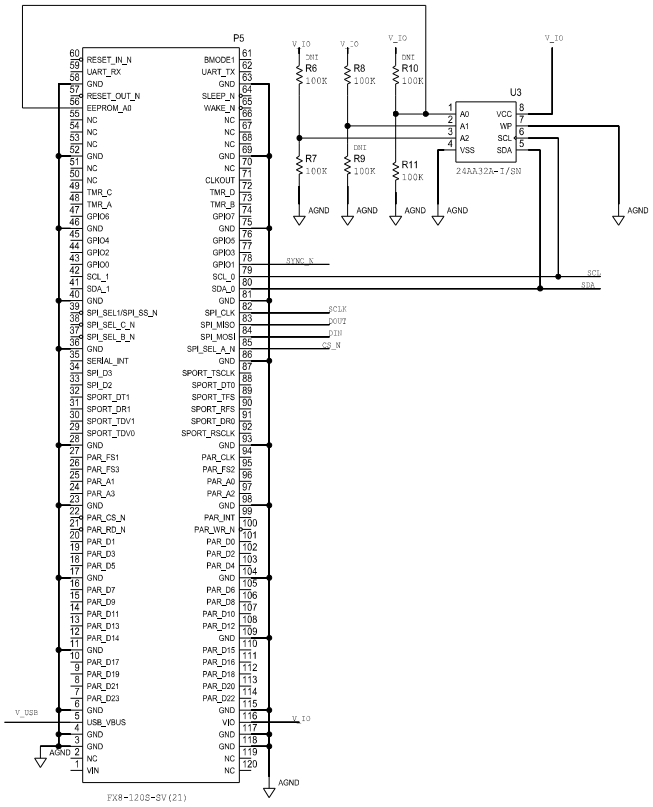

ARDUNIO HEADER

POWER

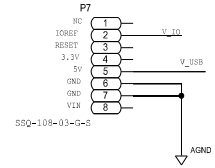

DIGI1

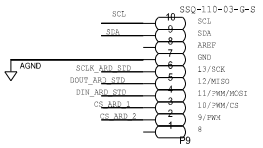

ANALOG IN

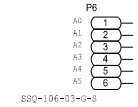

DIGI0

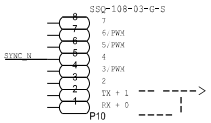

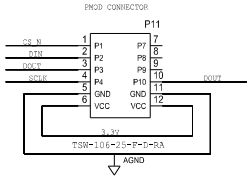

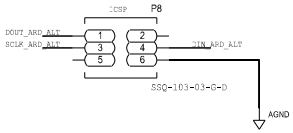

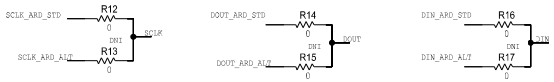

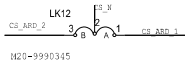

STD = STANDARD CONNECTION

ALT = ALTERNATE CONNECTION

DEFAULT A

ANALOG DEVICES

SCHEMATIC			
HW TYPE : Customer Evaluation 2 Product(s): AD7190 : AD7192			
DESIGN VIEW <DESIGN_VIEW>	DRAWING NO. 02-069484-02		REV A
PTD ENGINEER V. JEEVANNAVAR	SIZE D	SCALE 1:1	SHEET 4 OF 4