REVISIONS			
REV	DESCRIPTION	DATE	APPROVED

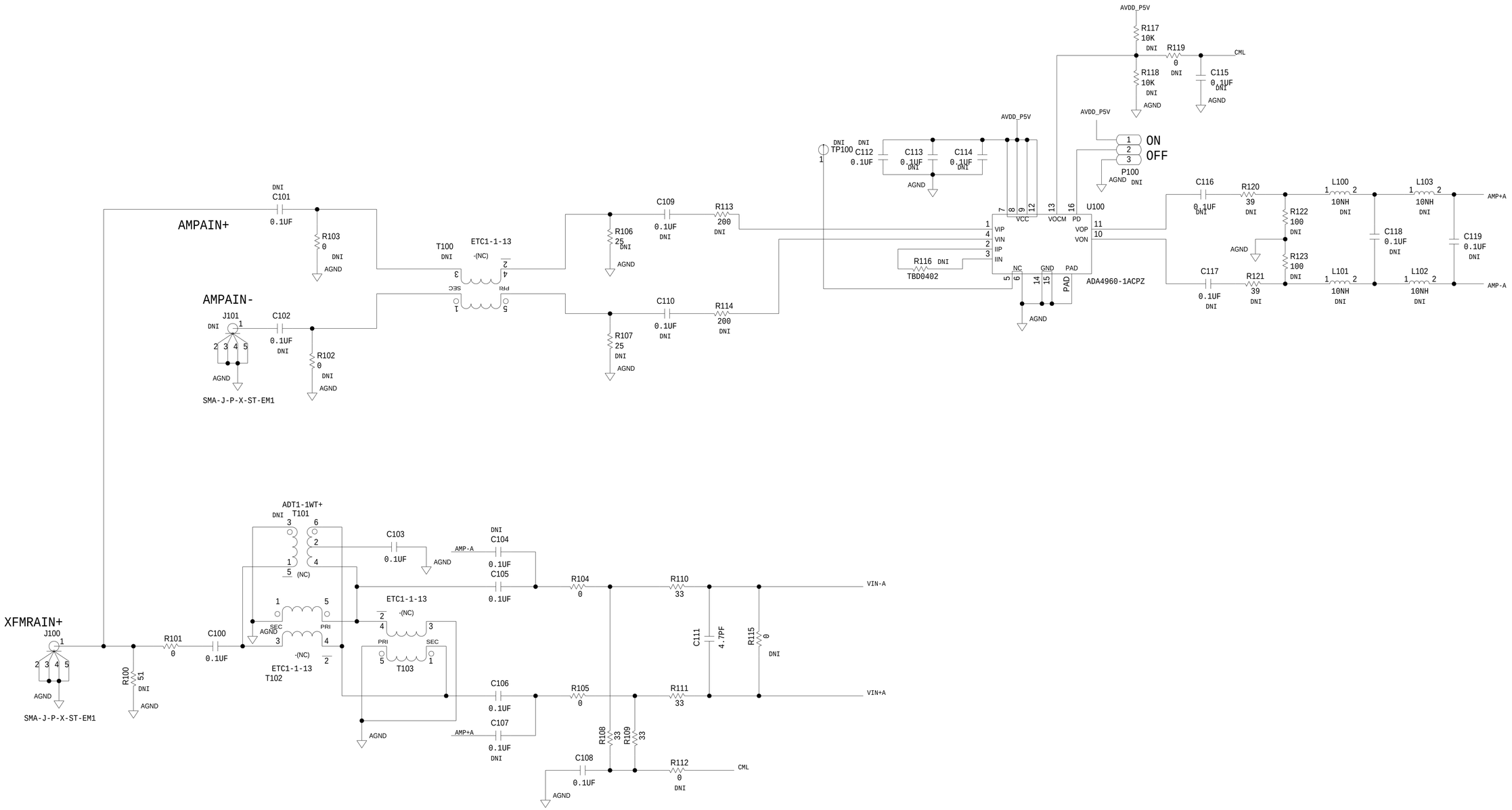

ANALOG DEVICES	SCHEMATIC		
	CUSTOMER EVAL BOARD AD9434-500EBZ -		
THIS DRAWING IS THE PROPERTY OF ANALOG DEVICES INC. IT IS NOT TO BE REPRODUCED OR COPIED, IN WHOLE OR IN PART, OR USED IN FURNISHING INFORMATION TO OTHERS, OR FOR ANY OTHER PURPOSE DETRIMENTAL TO THE INTERESTS OF ANALOG DEVICES. THE EQUIPMENT SHOWN HEREON MAY BE PROTECTED BY PATENTS OWNED OR CONTROLLED BY OWNED ANALOG DEVICES.	DESIGN VIEW -	DRAWING NO. 02-049125-01	REV C
	PTD ENGINEER -	SIZE D / SCALE NONE	SHEET 1 OF 6

REVISIONS			
REV	DESCRIPTION	DATE	APPROVED

CLOCK CIRCUITRY

DEFAULT CLOCK PATH

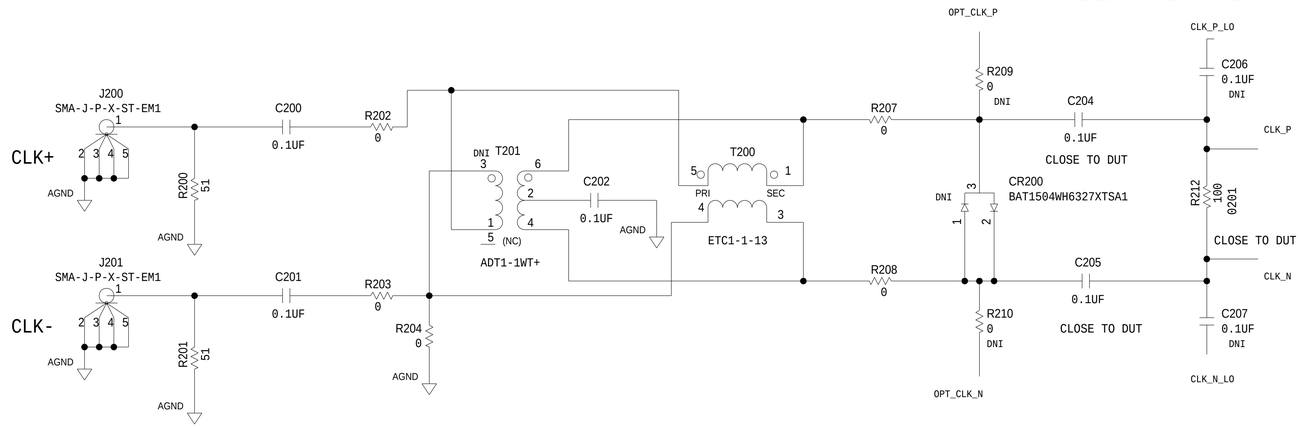

KILOPASS VOLTAGE

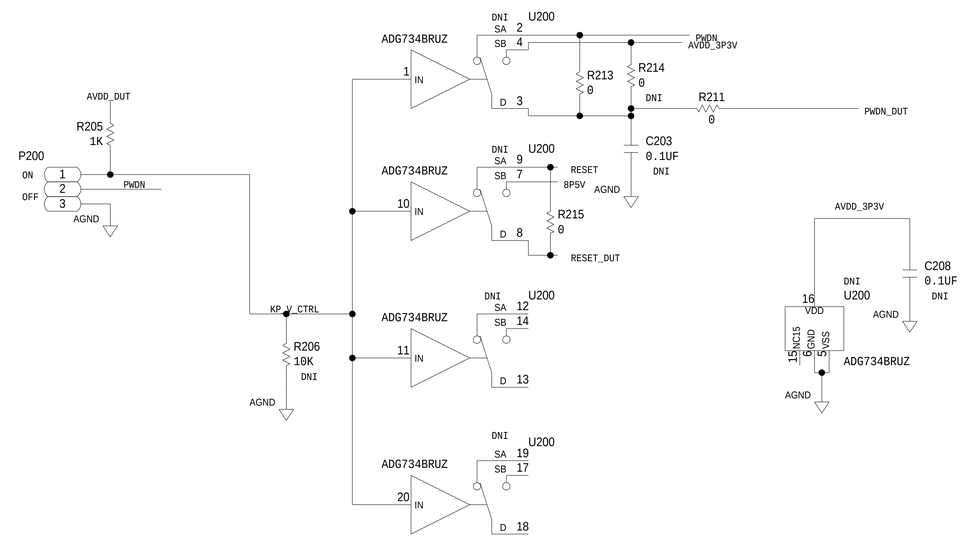

NOTE: ADG734 SYMBOL IS SHOWN WITH INPUT = LOGIC 1

ANALOG DEVICES

THIS DRAWING IS THE PROPERTY OF ANALOG DEVICES INC.
IT IS NOT TO BE REPRODUCED OR COPIED, IN WHOLE OR
IN PART, OR USED IN FURNISHING INFORMATION TO OTHERS,
OR FOR ANY OTHER PURPOSE DETRIMENTAL TO THE INTERESTS
OF ANALOG DEVICES.
THE EQUIPMENT SHOWN HEREON MAY BE PROTECTED BY PATENTS
OWNED OR CONTROLLED BY OWNED ANALOG DEVICES.

SCHEMATIC

CUSTOMER EVAL BOARD
AD9434-500EBZ
-

DESIGN VIEW	DRAWING NO.	REV
-	02-049125-01	C
PTD ENGINEER	SIZE D / SCALE NONE	SHEET 2 OF 6
-		

REVISIONS			
REV	DESCRIPTION	DATE	APPROVED

WALWART POWER SUPPLY INPUT
6VDC, 2A MAX

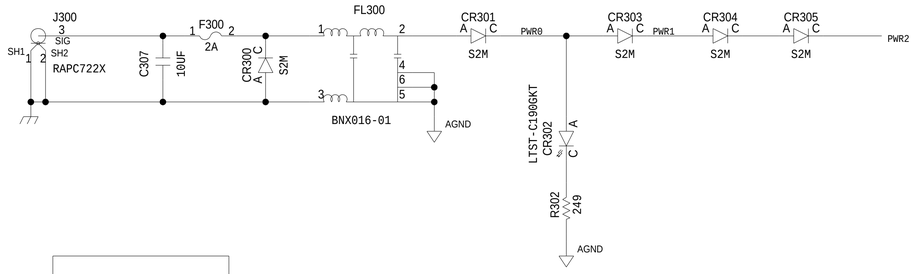

DECOUPLING CAPS

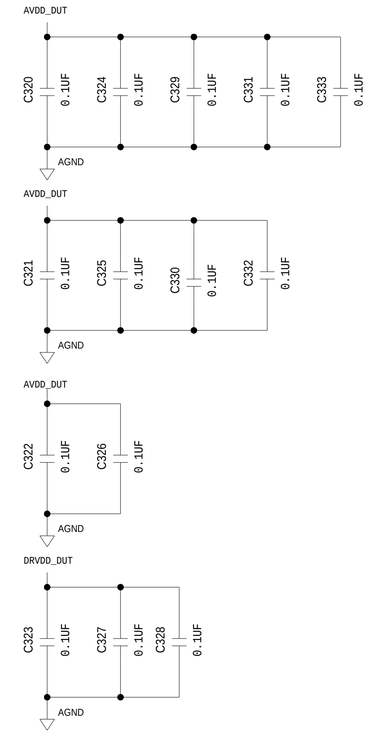

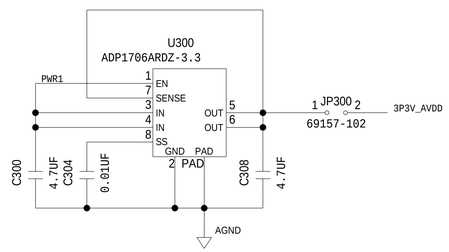

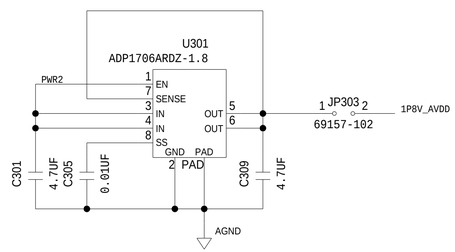

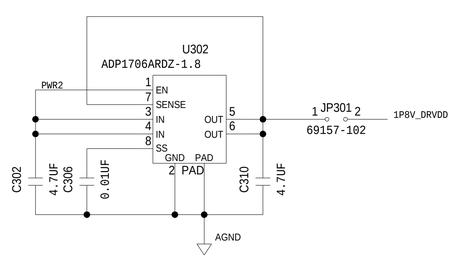

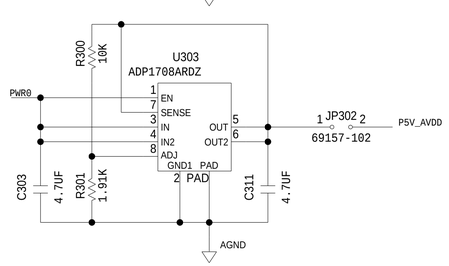

OPTIONAL POWER CONNECTIONS

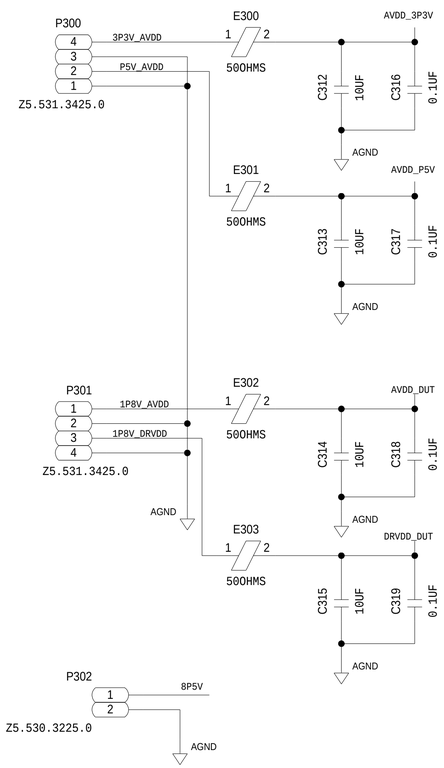

ANALOG DEVICES

THIS DRAWING IS THE PROPERTY OF ANALOG DEVICES INC.
IT IS NOT TO BE REPRODUCED OR COPIED, IN WHOLE OR
IN PART, OR USED IN FURNISHING INFORMATION TO OTHERS,
OR FOR ANY OTHER PURPOSE DETRIMENTAL TO THE INTERESTS
OF ANALOG DEVICES.
THE EQUIPMENT SHOWN HEREON MAY BE PROTECTED BY PATENTS
OWNED OR CONTROLLED BY OWNED ANALOG DEVICES.

SCHEMATIC

CUSTOMER EVAL BOARD
AD9434-500EBZ
-

DESIGN VIEW	DRAWING NO.	REV
-	02-049125-01	C
PTD ENGINEER	SIZE D / SCALE NONE	SHEET 3 OF 6
-		

REVISIONS			
REV	DESCRIPTION	DATE	APPROVED

SPI

COPIED FROM 9644EE01A SHEET 6

NOTE: ADG734 SYMBOL IS DRAWN WITH INPUT = LOGIC 1

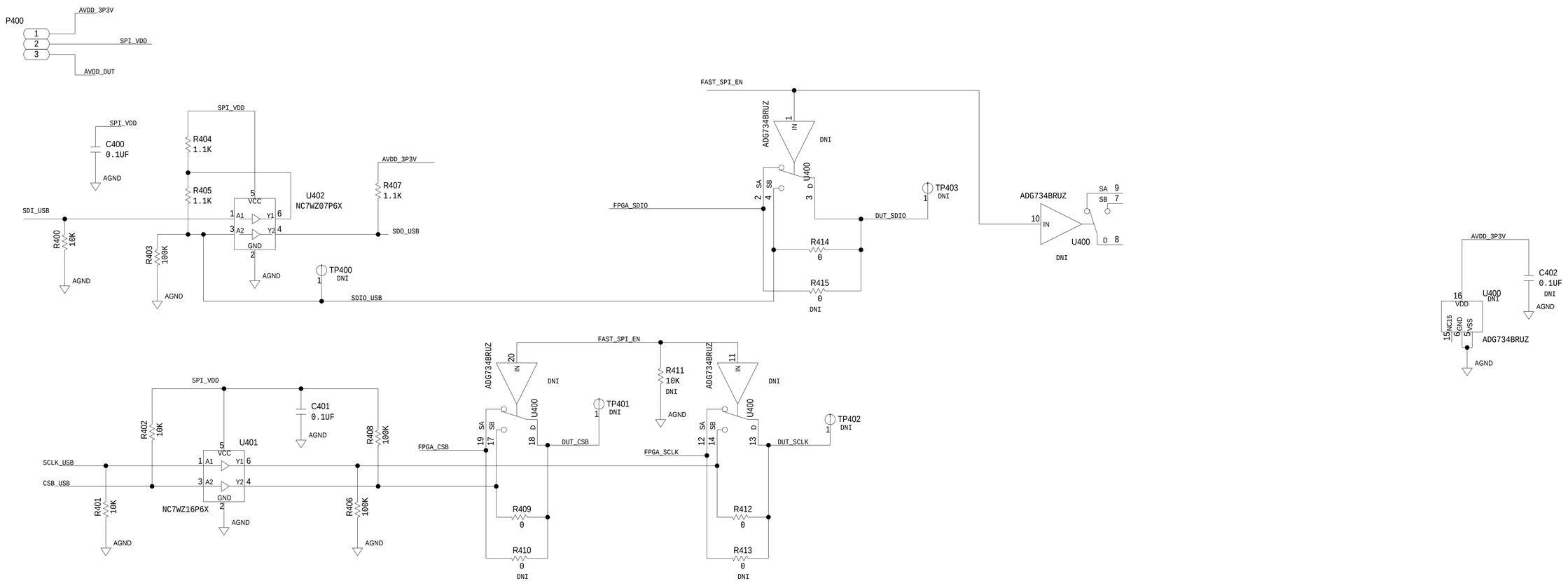

ANALOG DEVICES	SCHEMATIC		
	CUSTOMER EVAL BOARD AD9434-500EBZ -		
THIS DRAWING IS THE PROPERTY OF ANALOG DEVICES INC. IT IS NOT TO BE REPRODUCED OR COPIED, IN WHOLE OR IN PART, OR USED IN FURNISHING INFORMATION TO OTHERS, OR FOR ANY OTHER PURPOSE DETRIMENTAL TO THE INTERESTS OF ANALOG DEVICES. THE EQUIPMENT SHOWN HEREON MAY BE PROTECTED BY PATENTS OWNED OR CONTROLLED BY OWNED ANALOG DEVICES.	DESIGN VIEW -	DRAWING NO. 02-049125-01	REV C
	PTD ENGINEER -	SIZE D / SCALE NONE	SHEET 4 OF 6

REVISIONS			
REV	DESCRIPTION	DATE	APPROVED

DUT CIRCUITRY

SPI RESET

FUNCTION
HI=ENABLED
LOW=DISABLED

HIGH SPEED CONNECTION TO FPGA (FIFO5)

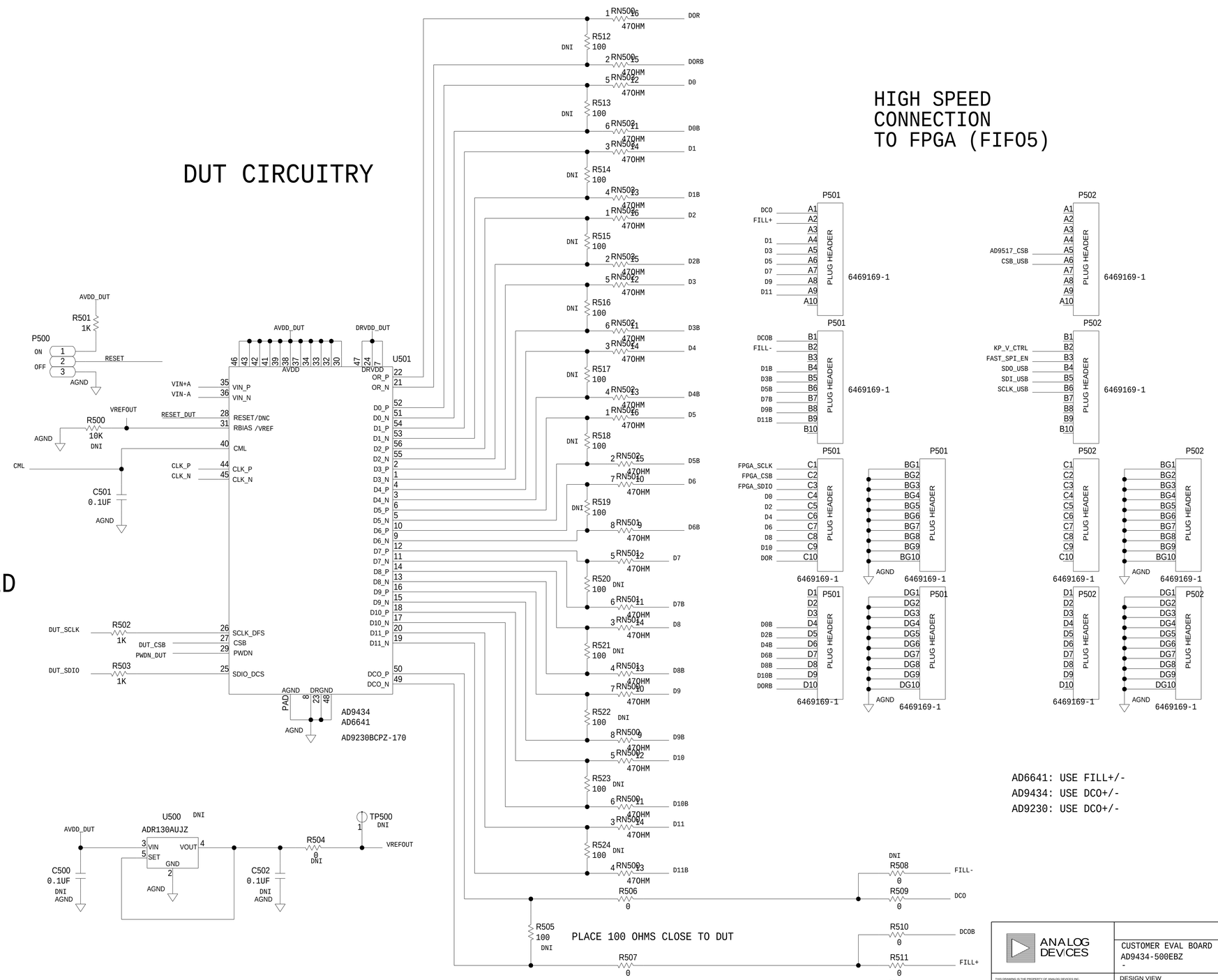

AD6641: USE FILL+/-
AD9434: USE DCO+/-
AD9230: USE DCO+/-

ANALOG DEVICES

THIS DRAWING IS THE PROPERTY OF ANALOG DEVICES INC.
IT IS NOT TO BE REPRODUCED OR COPIED, IN WHOLE OR
IN PART, OR USED IN FURNISHING INFORMATION TO OTHERS,
OR FOR ANY OTHER PURPOSE DETRIMENTAL TO THE INTERESTS
OF ANALOG DEVICES.
THE EQUIPMENT SHOWN HEREON MAY BE PROTECTED BY PATENTS
OWNED OR CONTROLLED BY OWNED ANALOG DEVICES.

SCHEMATIC

CUSTOMER EVAL BOARD
AD9434-500EBZ
-

DESIGN VIEW	DRAWING NO.	REV
-	02-049125-01	C
PTD ENGINEER	SIZE D / SCALE NONE	SHEET 5 OF 6
-		

REVISIONS			
REV	DESCRIPTION	DATE	APPROVED

OPTIONAL CLOCK PATH CIRCUIT

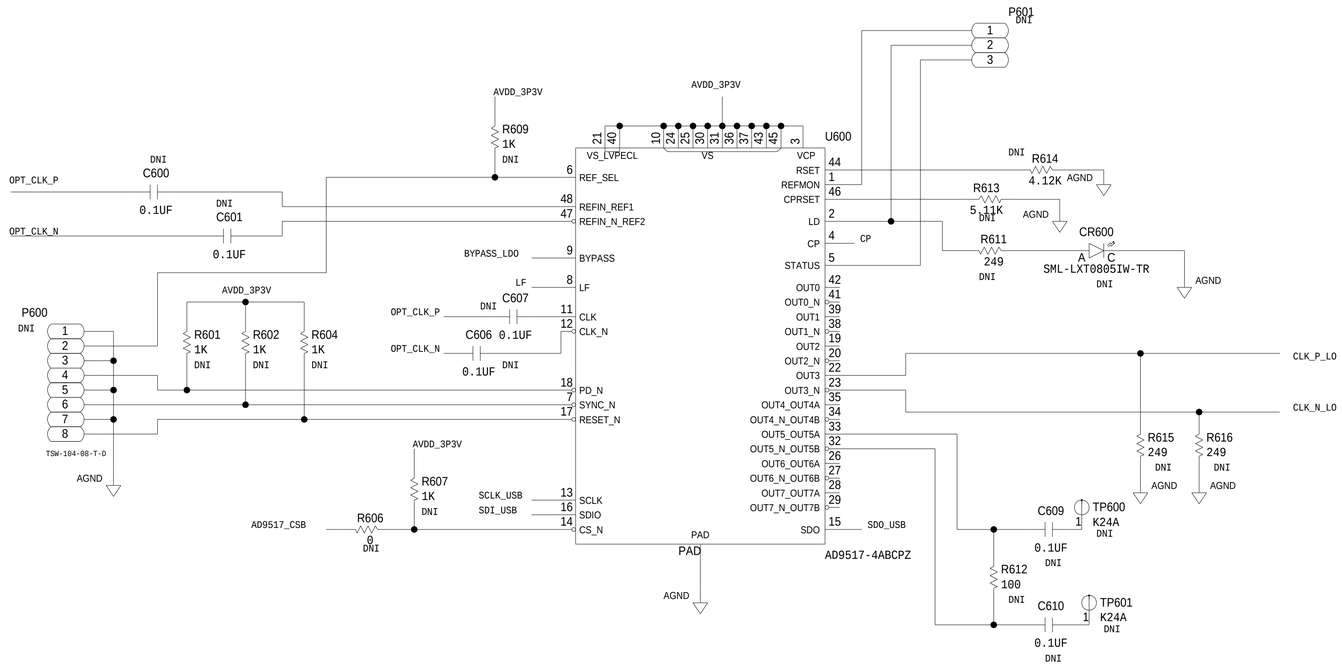

CHARGE PUMP FILTER

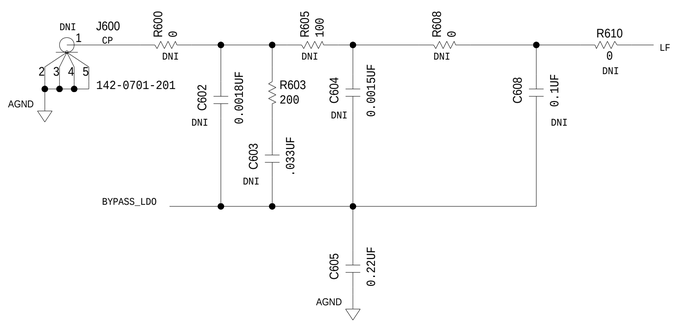

DECOUPLING

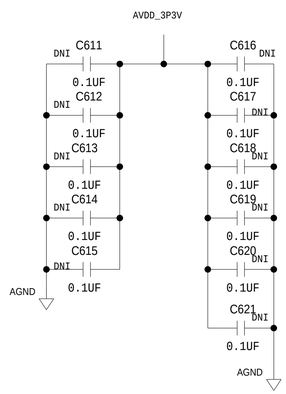

ANALOG DEVICES	SCHEMATIC		
	CUSTOMER EVAL BOARD AD9434-500EBZ -		
THIS DRAWING IS THE PROPERTY OF ANALOG DEVICES INC. IT IS NOT TO BE REPRODUCED OR COPIED, IN WHOLE OR IN PART, OR USED IN FURNISHING INFORMATION TO OTHERS, OR FOR ANY OTHER PURPOSE DETRIMENTAL TO THE INTERESTS OF ANALOG DEVICES. THE EQUIPMENT SHOWN HEREON MAY BE PROTECTED BY PATENTS OWNED OR CONTROLLED BY OWNED ANALOG DEVICES.	DESIGN VIEW -	DRAWING NO. 02-049125-01	REV C
	PTD ENGINEER -	SIZE D / SCALE NONE	SHEET 6 OF 6